WHITE PAPER

SAIT Reliability

Presented by

SONY

November 2004

INTRODUCTION

The goal of data backup is simple – to create a safety net for critical business data in the event of a system failure, file corruption or deletion. We have come to accept that hardware and software failures will occur, and that files will be corrupted and deleted for a multitude of reasons. However, failure of the backup itself is not something most of us are willing to accept. Downtime is costly, data loss can be devastating, and recreating files is expensive and sometimes impossible. Still, for many of us, backup failures are or have been a painful reality.

Over the years, tape drive manufacturers have attempted to identify the reliability flaws common in tape technologies. With over 50 years experience in recording media technologies and extensive R&D investments in high areal density recording, Sony has been able to use this accumulated expertise to address the common reliability concerns inherent with tape. Sony's latest tape technology, SAIT, is based on a combination of the highest quality materials and breakthrough technologies to offer superior, industry-leading reliability.

Milestones in the Development of Sony Tape Technology and Recording Drives

1950 - Stationary head device, first audio recorded
1963 - Portable video recorder with helical scan
1977 - One-inch video tape recorder
1985 - 8mm video tape recorder
1987 - Mass production technology for metal vapor deposition tape
1987 - Digital audio tape (DAT) and component digital VTR (D-1) for broadcast use
1989 - Digital Data Storage (DDS)
1990 - Hi 8ME, 8mm cassette for broadcast use
1993 - Component digital VTR Betacam for broadcast use
1994 - Diamond Like Carbon protective film and super durable, AME tape
1996 - Sony introduces Advanced Intelligent Tape (AIT) Technology
1996 - AIT technology using AME tape introduced
1996 - AIT-1 wins "Best New Technology Award" from *Byte Magazine*
1997 - AIT-1 approved as standard by European Computer Manufacturers Association (ECMA)
1998 - AIT-2 technology announced
1998 - AIT-1 enhanced from 25 GB to 35 GB
1999 - AIT-2 begins customer shipments
1999 - AIT Forum created in Denver
1999 - AIT prototype demonstrates 1Mb/in.^{2} areal density
1999 - AIT-2 format approved as an industry standard by ECMA
2000 - Sony Dothan, AL produces AIT-2 media
2000 - AIT-2 won "Storage and Peripherals Award of the Year" by *Imaging & Document Solutions Magazine*
2000 - Sony, HP and Compaq create "Auxiliary Memory" ANSI specification
2000 - AIT-3 technology announced
2000 - AIT-1 value series introduced & data transfer rate enhanced to 4.0MB per second
2000 - Sony forms Tape Storage Solutions Division in Japan and United States
2000 - AIT prototype demonstrates 6.5Gbit/in.^{2} areal density
2001 - Sony announces the introduction of AIT WORM drives and media
2001 - Sony delivers AIT-3 drives and media to the market
2001 - Consortium of storage companies approves R-MIC specification
2001 - Sony introduces SAIT Technology
2002 - Sony shatters areal density record by demonstrating 11.5 Gbit/in.^{2}
2002 - Qualification SAIT-1 drives and media start shipping to OEMs
2003 - Production SAIT-1 drives and media start shipping to OEMs

HELICAL SCAN RECORDING

The core technology that enables SAIT to offer unsurpassed capacity is the helical scanning system. The read-write head rotates at a specific angle, while the tape is wrapped around it, achieving up to two times the density when compared to linear recording technologies. However, the benefits of helical scan recording go much beyond higher density recording. Benefits also include reduced wear-and-tear and improved overall drive and media durability.

Helical Scan Recording

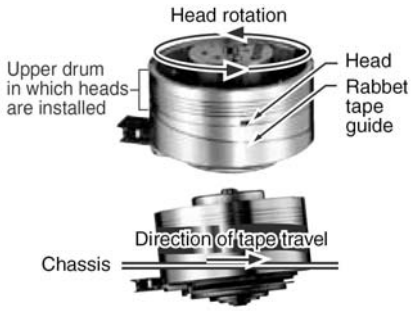

Linear Recording

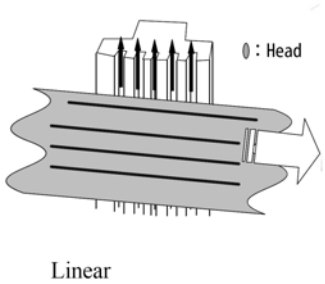

Phase Servo Capstan

The data written on the SAIT tape forms helical tracks, and is read out from the tape by tracking along the helical tracks. During recording, the tape speed must remain constant to record accurate track width. Micron-level tape tracking is reliably achieved using the phase servo motor of the capstan. Error signals precision-control the capstan speed allowing it to accurately position the tracks on the head. This system provides high data integrity, ensuring that data is readable after backup, and also enables upgrading to higher capacity.

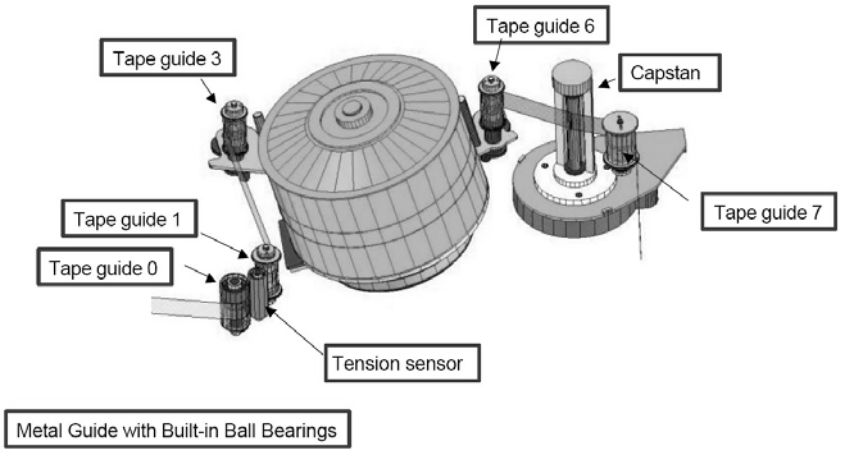

Reduced Tape Load

SAIT utilizes a rotational metal guide with built-in ball bearings to support a stress free environment for the tape and drive mechanism, reducing tape load.

Tape Tension

Variance in tape tension can cause read-write errors and wear-and-tear to the media and hardware. SAIT incorporates a tension sensor that provides feedback on system conditions to realize stability and optimize stress free tension. By permanently controlling the tape tension, overall reliability is drastically increased.

Tape Tension Comparison

	SAIT	LTO-2	SDLT600
Grams	10	100	100

Source: Panasonic (http://panasonic.co.jp/mke/en/sait/heri.html)

Optimal Air Film

Adding a thin, carefully calculated groove to the drum enables a constant micron-depth film of air to be created, and a structure whereby the SAIT tape is evenly attached to the drum in spite of the low tension, reducing potential damage to the tape and increasing overall durability.

Air Film Groove

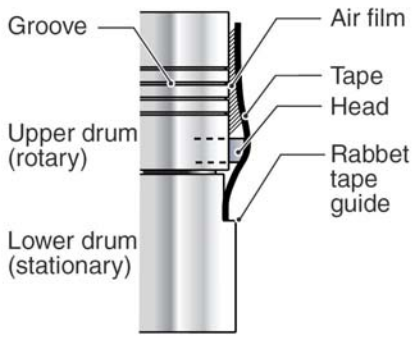

Low Tape Speed

Friction causes heat, and heat can melt tape. Simply put, friction is destructive to tapes. In SAIT, the upper part of the drum containing the head is rotated steadily at high speed in order to maintain sufficient head-to-tape relative speed, while the tape runs at low speed in low-friction contact with the head. In addition to minimizing friction, this also results in narrow track pitch, enabling high-density recording.

Tape Speed Comparison (inches per second)

	SAIT	LTO-2	SDLT600
Read/Write	1	217-232	108

Source: InoStor LTO Tape Drives User Manual and Quantum SDLT600 Product Specification.

Single Pass Recording

Unlike linear serpentine recording technologies, which record up to 56 tracks in a back-and-forth motion before filling up the tape, helical scanning records the SAIT tape in one pass. This not only reduces the wear-and-tear on the drive and media, but also improves overall performance by eliminating the “shoe-shining” effect.

Helical Scan – One Pass Recording

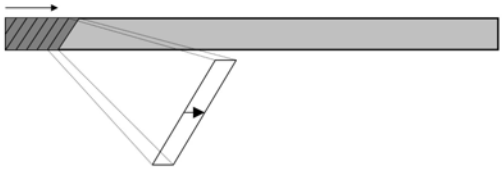

Linear – Multiple Tracks Back-and-Forth

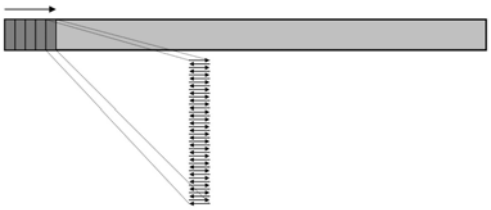

Passes Required to Fill Tape

	SAIT	LTO-2	SDLT600
Passes	1	64	40
Tracks	133 per Group	512	640
Channels	8	8	16

Source: USGS Offline Archive Media Trade Study, February 2004, and Quantum Corporation.

ADVANCED METAL EVAPORATED (AME) MEDIA

Metal Particle (MP) media, commonly used by competing technologies, uses binder polymer to adhere the magnetic material to the base film of the media. There are several disadvantages to the use of this binder material. Binder degradation occurs over time, usually from humidity and temperature changes, causing the material to build up on the head, resulting in the need for

frequent cleaning. Over prolonged periods of time, oxide shedding, a reaction referred to as "sticky shed syndrome" can occur, where the surface of the media becomes softer than normal and can create a gummy residue. This can cause increased friction, instant head clogging, tape seizing, and even damage to the hardware and/or media.

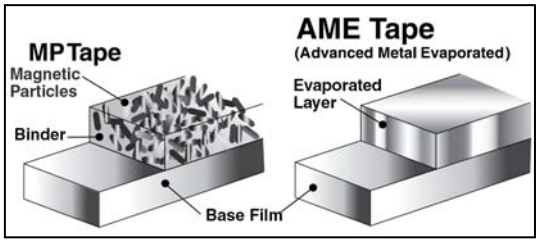

SAIT utilizes Advanced Metal Evaporated (AME) media technology. AME is crucial for high-density recording and has been proven through its use with AIT. Pure 100% cobalt is used as the magnetic medium in AME media, in a process involving its vacuum-evaporated attachment to the base film. As a result, AME media can achieve higher recording density than that of existing MP media. Deposits on the head are also substantially reduced as no binder polymer is used to secure the magnetic substance, dramatically reducing head clogging, and eliminating the possibility of sticky shed syndrome. To further enhance the durability of the AME media, a Diamond-Like Carbon (DLC) coating is applied to offer superior wear resistance. The result, is a highly reliable media solution offering archival life of up to 30 years.

REMOTE SENSING MEMORY-IN-CASSETTE (R-MIC)

SAIT incorporates Remote Sensing Memory-In-Cassette (R-MIC), an 8-kByte solid-state memory chip mounted on the data cartridge. The system log and data position information is stored on the R-MIC, significantly reducing load and file access time, improving performance. In addition, because the tape itself does not have to be accessed for this information, there is less wear-and-tear, prolonging the life of both the media and hardware.

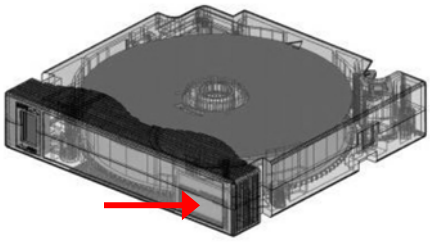

BUILT-IN HEAD CLEANER

SAIT drives incorporate an internal head cleaner to help prevent head contamination, which can obstruct the reading or writing of data and cause wear on the head and media. The automatic head cleaner dramatically reduces head contamination, improving data integrity, and increasing overall drive and media reliability.

ERROR CORRECTION

SAIT has an exceptionally reliable error correction system. Capacity loss per track is smaller than with existing rewrite functions, since rewriting is possible at different heights per block, producing extraordinarily accurate re-recording levels. Furthermore, burst errors of up to 16% of the overall track can be corrected and reproduced normally using our triple-step error correction code. And by using 3-level error correction codes, data reliability is significantly improved.

ECC

	SAIT	LTO	SDLT
ECC Levels	3-Level	2-Level	Not Published

Source: InoStor LTO Tape Drives User Manual

DUAL MODE TAPE PATH

The SAIT mechanism utilizes a dual-mode tape path delivering smooth operation and minimal tape friction under various operating conditions. Only during read, write and low-speed tape positioning operations is the tape wrapped around the drum.

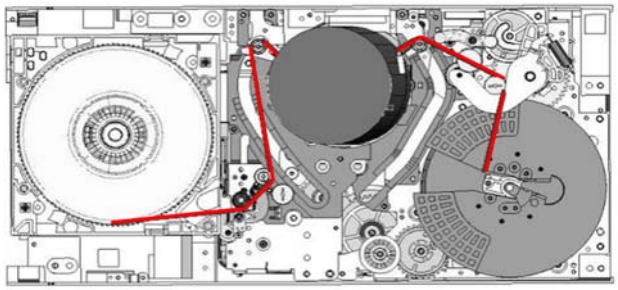

During high-speed searches the SAIT tape path is kept very short and simple, and utilizes the contents of the R-MIC to provide reliable positioning information.

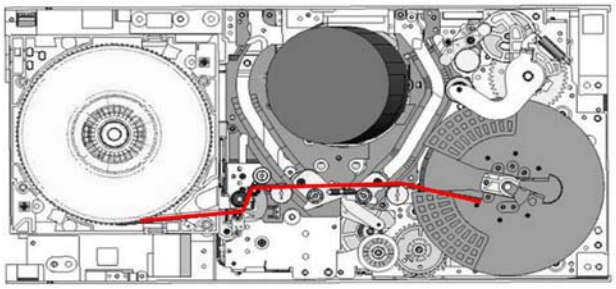

SIMPLE LOADING MECHANISM

The automated process of loading single-reel tape cartridges into a drive has not always been dependable. Sometimes the drive might not catch the leader, the leader may become dislodged, or the leader may break altogether, which could result in sudden death to the cartridge and all of the data located on it.

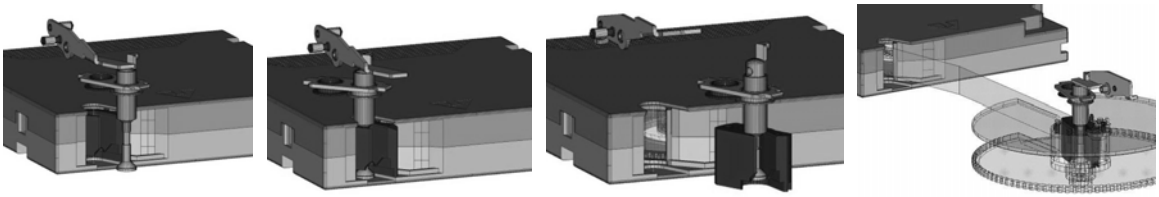

SAIT's leader block chucking system enables reliable loading of the tape, and eliminates the possibility of faulty chucking. Three non-contact optical sensors monitor the leader chucking operation. If mis-chucking occurs, the sensors will signal the drive to automatically re-try.

OPTICAL SENSORS

Non-contact optical sensors have been adopted to monitor the operation of the tape and the drive, such as the leader block chucking operation. This further enhances accuracy. And by eliminating contact with the mechanism, reduced wear-and-tear is achieved for the mechanism and the sensors, improving overall durability.

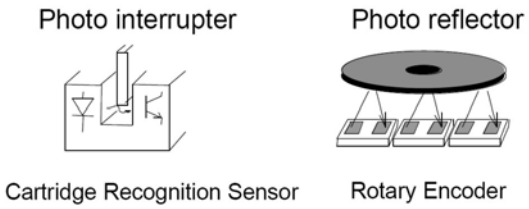

DUST-RESISTANT DESIGN

Dust and other airborne contaminants can be detrimental to both tape drives and media, causing operational problems, including read-write errors, and could potentially result in drive and/or media failures. The SAIT drive incorporates several design features to reduce dust and other airborne contaminants from entering the mechanism.

Dust-Resistant Bezel
Although the bezel on the SAIT drive is stylish, it was specifically engineered to provide a unique dust-resistant design. The bezel acts as a barrier, reducing dust intake through the media slot.

Dust Shutter
The SAIT mechanism has been designed with an internal shutter to offer increased protection from dust particles within the drive mechanism.

Sealed Deck Design
In addition, the SAIT drive has a tightly enclosed sealed structure in which the heat-generating circuit boards are kept separate from the mechanical workings. Air flows under the deck to provide effective cooling of the electronics. In addition to providing superior durability, it is virtually dust-proof.

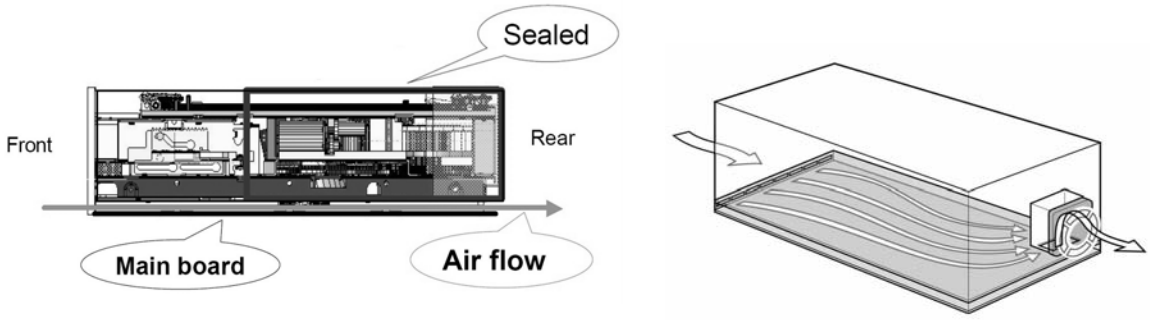

CONCLUSION

For the fifth year in a row, and the seventh time in the past ten years, Sony has been voted the number one “best brand” in the annual Harris Poll®. This recognition is the result of Sony’s ability to consistently introduce leading-edge, high quality products. Sony’s SAIT tape technology is no

exception. The culmination of years of experience in research and development in magnetic recording, SAIT offers industry-leading capacity, performance, and superior reliability.

As businesses rely on technology to create and store mission critical information, reliable backup is a major concern. SAIT's technological advancements, including AME media, R-MIC, 3-Level ECC, leader block chucking system, and the dust proof design, all add up to a highly reliable, OEM-grade tape drive, ideal for use in demanding, enterprise storage environments. SAIT – A Hallmark to Sony's commitment to technological excellence.

Overall Reliability Specifications

	SAIT	LTO-2	SDLT600
MTBF	500,000 hours	250,000 hours	250,000 hours
Duty Cycle	100%	100%	100%
Head Life (typical)	50,000 hours (25°C)	60,000 hours	50,000 hours

Source: Quantum LTO Ultrium Automation Tape Technology and SDLT 600 Product Manual